AKS.146.000.000 SV

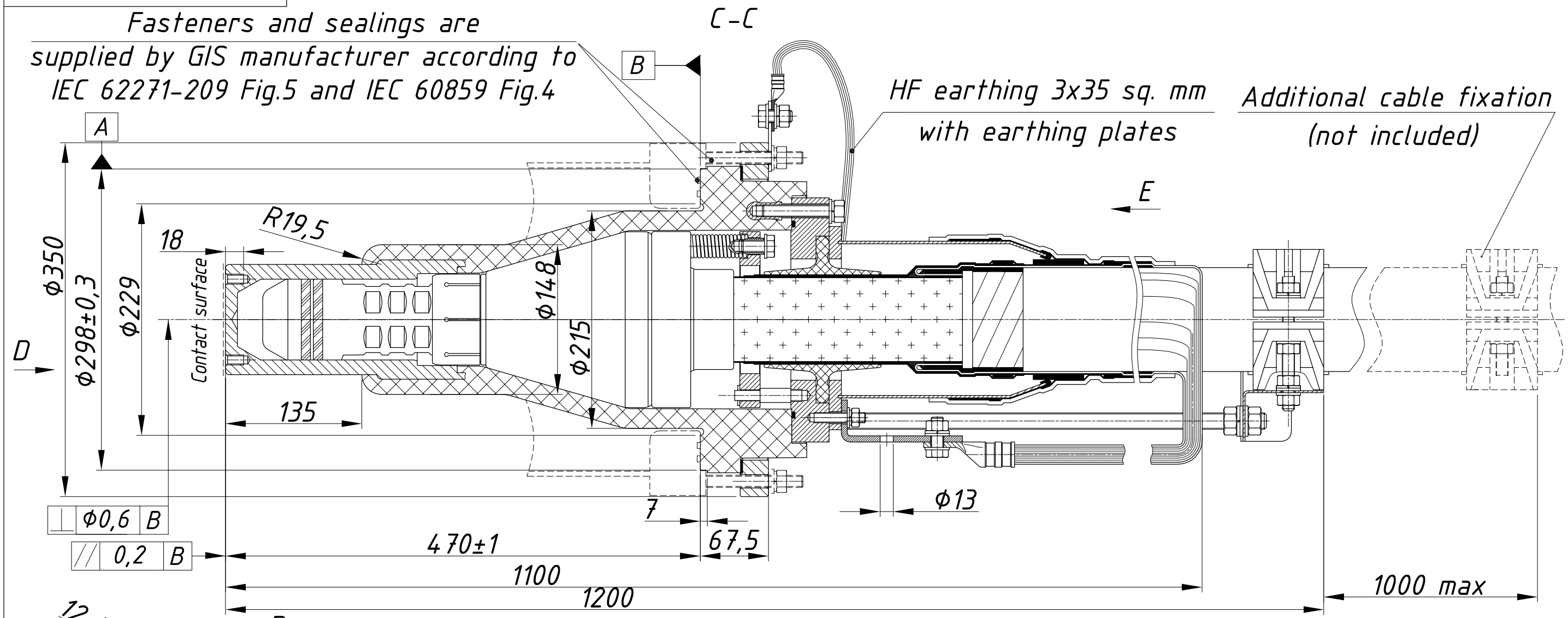

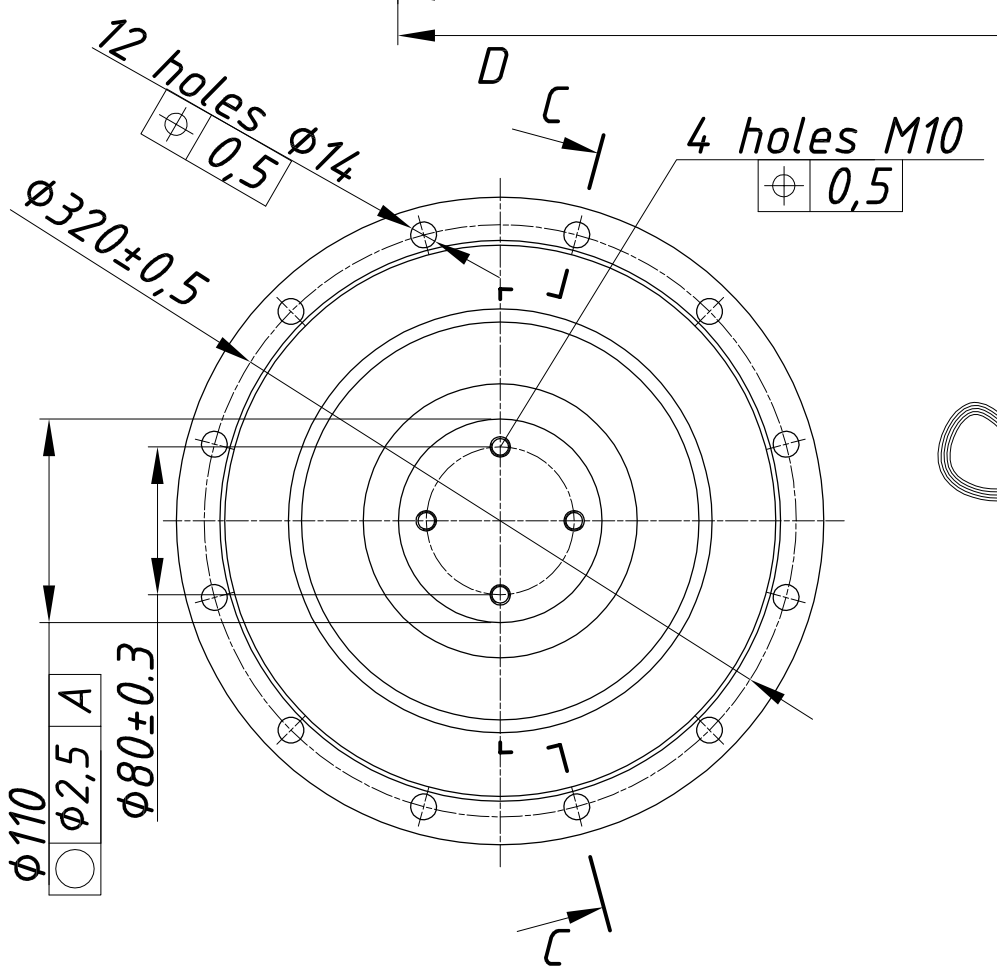

E (1:10)
see n.5

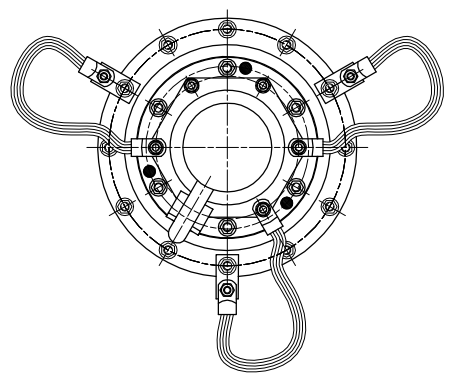

1. Dimensions and scope of supply according to IEC 62271-209 Fig.5 and IEC 60859 Fig.4 (L5=470 mm). Extension adapter for L5=757 mm according to IEC 62271-209 Fig.3 and IEC 60859 Fig.2 is optionally available.
2. Conductor cross-section range, mm sq.:
   Cu: up to 1600*; Al: up to 500 (crimping), up to 1000 (screwing), 1200-1600* (welding).
   *Depends of insulation thickness.
3. Prepared insulation diameter range: 47-84 mm.
4. Maximal overall diameter of cable - 115 mm.
5. If possible HF earthings shall be routed to GIS flange directly. Otherwise see view E.
6. Cable shall be fixed to metal framework additionaly not further than im 1 m from cable clamp. Additional fixation kit is not included to the scope of supply.
7. The heighest operation voltage is 170 kV.

					AKS.146.000.000 SV		
Chan.	Sheet	Doc. #	Sign.	Date	MBB A 126/145/170 GIS Sealing End	Letter / Mass	Scale 1:4
Develop		Khoroshilov		13.02.2019			
Check		Terekhov		13.02.2019		Sheet	Sheets 1
Approve		Kintyukhin		13.02.2019	Simple view	Arkasil SK LLC	

Format A3